FEMALE END VIEW	MALE END VIEW	FEMALE END VIEW
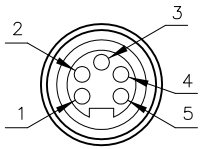	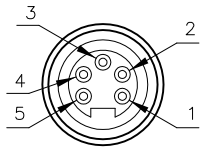	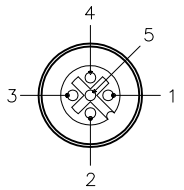
mini fast. DeviceNet™	mini fast. DeviceNet™	euro fast. DeviceNet™

SPECIFICATIONS

CONTACT CARRIER MATERIAL	NYLON OR TPU
MOLDED HEAD MATERIAL/COLOR	TPU/BLUE–GRAY
CONTACT MATERIAL/PLATING	BRASS/GOLD
COUPLING NUT MATERIAL/FINISH	STAINLESS STEEL/PASSIVATED
RATED CURRENT [A]	4.0 A
RATED VOLTAGE [V]	250 V
TEMPERATURE RATING	–30°C TO +75°C (–22°F TO +167°F)
PROTECTION CLASS	MEETS NEMA 1,3,4,6P AND IEC IP67

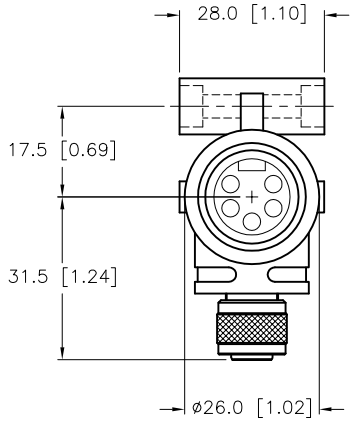

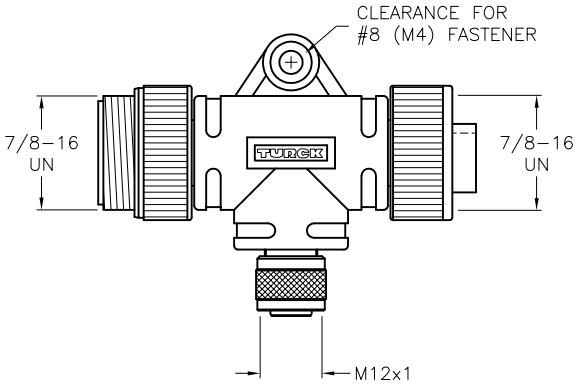

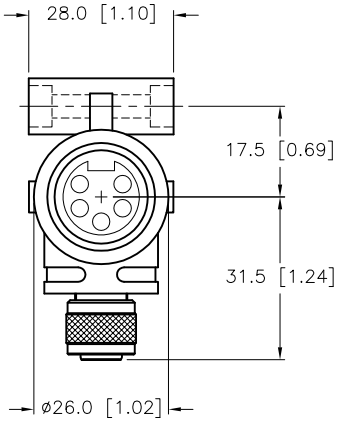

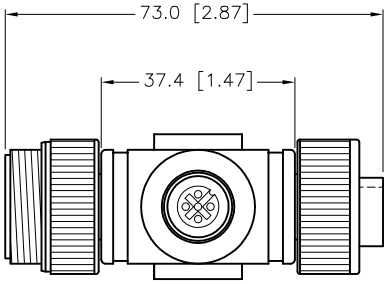

WIRING DIAGRAM

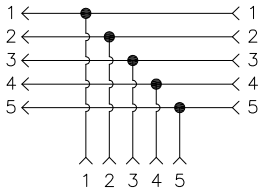

SOURCE DRAWING - FOR REFERENCE ONLY

RELATED DOCUMENTS	3RD ANGLE PROJECTION	THIS DRAWING IS CONFIDENTIAL AND THE PROPERTY OF TURCK INC. USE OF THIS DOCUMENT WITHOUT WRITTEN PERMISSION IS PROHIBITED.	TURCK INC High Technology Sensors and Automation Controls	3000 CAMPUS DRIVE MINNEAPOLIS, MN 55441 1–800–544–7769 (763) 553–7300 (763) 553–0708 fax turck.com
1. 2. 3. 4.				
MATERIAL	ALL DIMENSIONS DISPLAYED ON THIS DRAWING ARE FOR REFERENCE ONLY	DRFT RDS / DATE 06/01/06	DESCRIPTION RSV FKV RKV 57	
		APVD / SCALE 1=1.5		
FINISH	CONTACT TURCK FOR MORE INFORMATION	UNIT OF MEASUREMENT **MILLIMETER [INCH]**	IDENTIFICATION NO. U7817	REV E
		DO NOT SCALE THIS DRAWING	FILE: U7817	SHEET 1 OF 1

REV	DESCRIPTION	BY	DATE	ECO NO.
E	UPDATE CONTACT CARRIER MATERIAL	RDS	02/23/12	27902

Approved 02/24/2012, work order #25497 by A.A.